Vehicle system

schematic with lithium

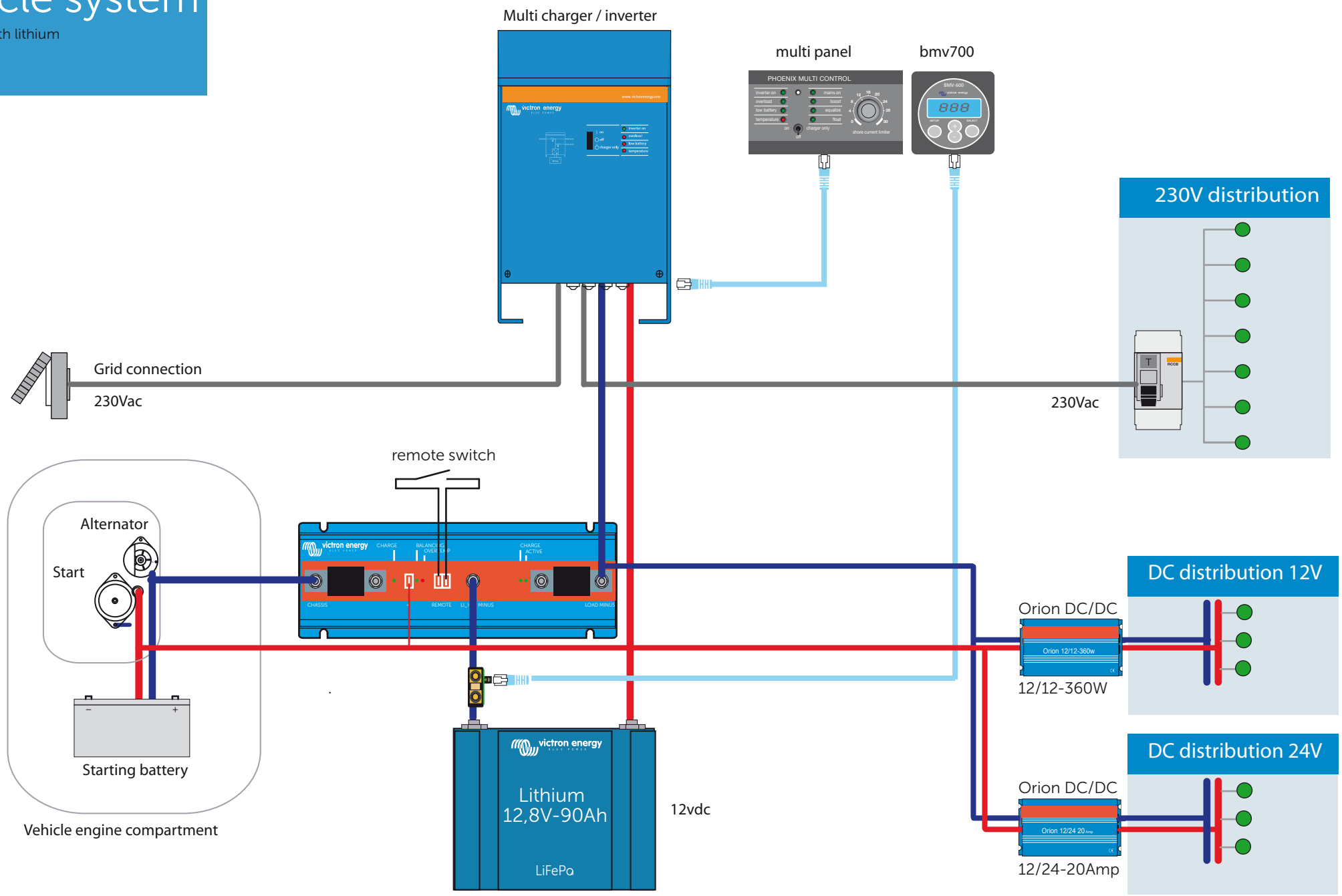

victron energy
BLUE POWER